Wireless Power Receiver CH241

Datasheet

Version: 1A

http://wch.cn

1. Overview

CH241 is a wireless power receiver, which integrates Qi BPP communication protocols, 2-channel output voltage detection mechanism, and output control enable. CH241 supports up to 5W output power. It can be widely used in various low power wireless charging receiver design circuits.

2. Features

- On-chip LDO
- Supports 5W wireless charging output power
- Supports Qi BPP standard charging protocol
- Supports output dual feedback to protect DC-DC safe overload start
- Supports voltage output enable control

3. Applications

- Wireless back charger
- Wireless headset charging case
- Electric toothbrush

4. Pinouts

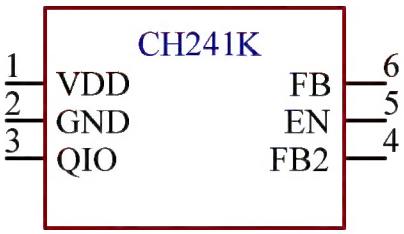

CH241K pinouts

5. Pin definitions

Pin No.	Pin Name	Pin Type	Description
1	VDD	Power	Power supply input, connects to an external 1uF decoupling capacitor, requires a resistor in series to input
2	GND	Power	Ground
3	QIO	Output	Qi protocol communication output pin
4	FB2	Analog input	Output voltage feedback input
5	EN	Output	Power supply output enable control pin, active high
6	FB	Analog input	Coil oscillation voltage feedback input

6. Functional description of pins

6.1. QIO pin

QIO pin is a Qi protocol communication output pin which is connected to the modulation control circuit and couples the signal to the oscillation circuit.

6.2. FB2 pin

FB2 pin detects the output voltage in real time. If the voltage on FB2 pin is lower than 1.2V during charging, the output enable terminal will be turned off. The purpose is to prevent the problem that the DC-DC overload may not start when the input voltage is low. This pin has a built-in 5.1K pull-down resistor. If not used, just pull it up.

6.3. FB pin

FB pin is a coil oscillation voltage feedback input pin. This pin tracks the deviation of the feedback input voltage and the target voltage in real time for regulation. The target voltage value can be changed by modifying the peripheral feedback resistance.

6.4. EN pin

EN pin is a Power supply output enable control pin. It is at low level by default after powered up. When the input voltage reaches a certain value, it outputs high level, enabling the DC-DC output. If not used, it can be floated.

7. Application circuit for reference

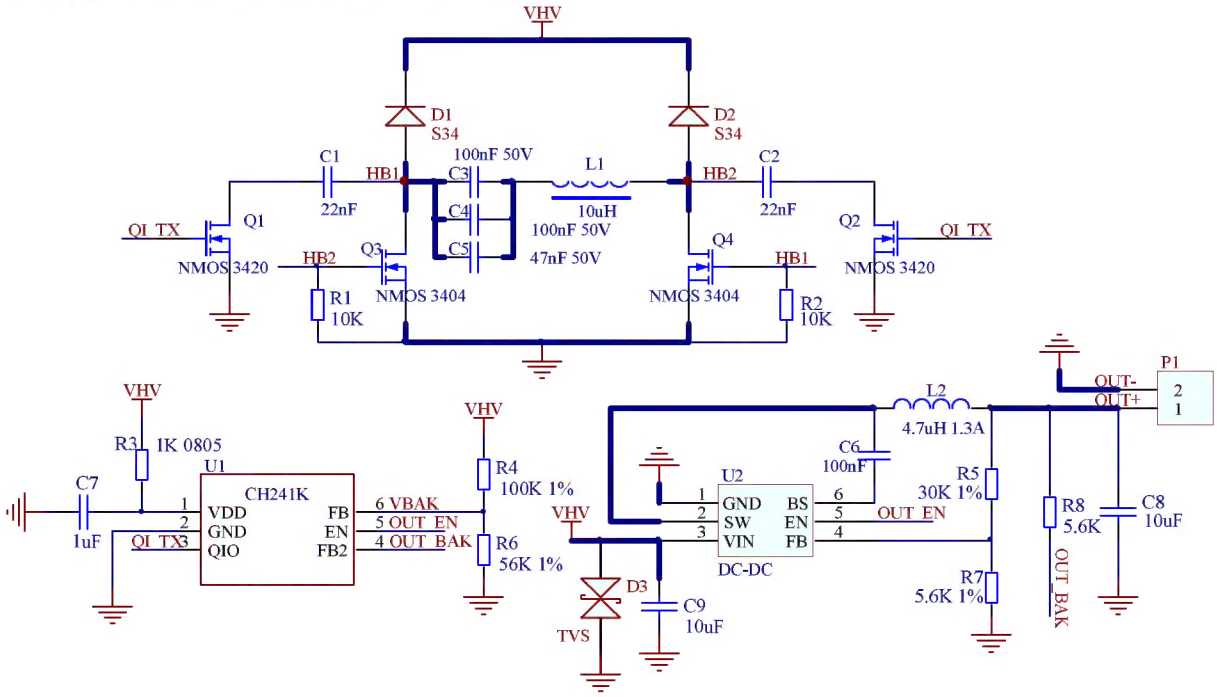

CH241K circuit for reference

8. Parameters

8.1. Absolute maximum ratings

Stresses at or above the absolute maximum ratings listed in the table below may cause permanent damage to the device.

Symbol	Parameter description	Min.	Max.	Unit
TA	Operating ambient temperature	-40	105	℃
TS	Storage ambient temperature	-55	150	℃
VDD	Operating supply voltage (VDD connects to power, GND to ground)	-0.5	5.8	V
VIOCC	Voltage on FB2 pin	-0.5	8.0	V
VIOUX	Voltage on FB pin	-0.5	8.0	V
ESD	Human body model (HBM)		2	KV

8.2. Electrical characteristics

Test conditions: TA=25℃.

Symbol	Parameter description	Min.	Typ.	Max.	Unit
VDD	Operating supply voltage	3.0		3.6	V
VLDO	Voltage of on-chip LDO		3.6		V
ICC6	Total operating current		0.7	1.4	mA
ILDO	Ability of on-chip LDO to absorb current	0		30	mA
VOL1	Low level output voltage on QIO		0.4	0.5	V
VOH1	High level output voltage on QIO	VDD-1.9	VDD-1.6		V
VR	Power on reset threshold	2.2	2.4	2.6	V

9. Package information

Package	Body size		Lead pitch		Description	Part No.
SOT23-6L	1.6mm	63mil	0.95mm	37mil	Small outline 6-pin patch	CH241K

Note: All dimensions are in millimeters.

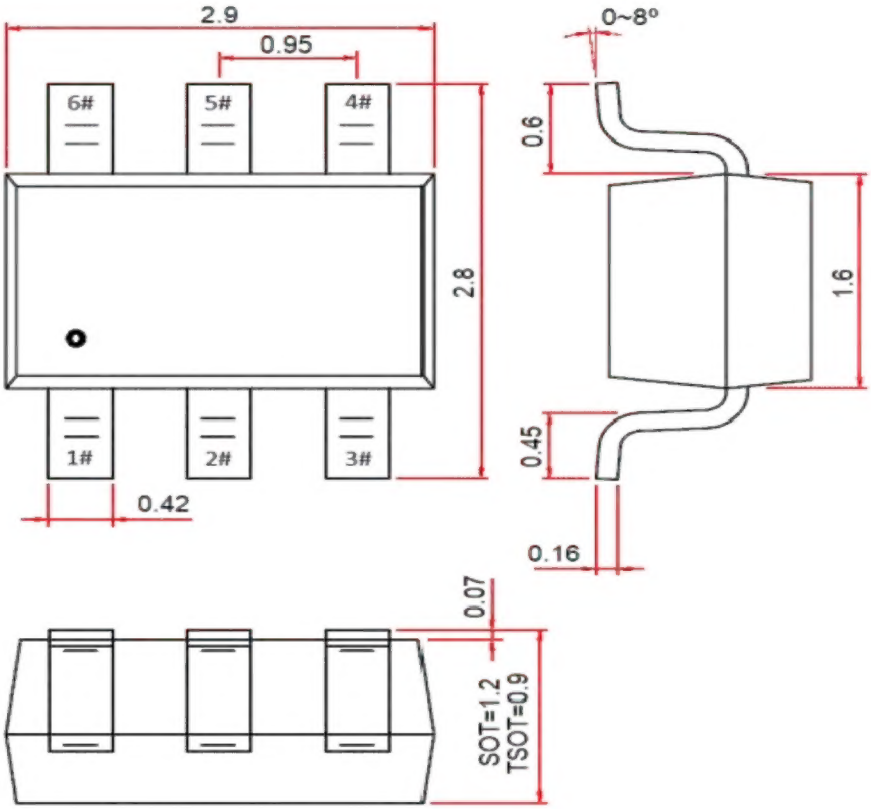

SOT23-6L outline